Lesson 1

COMPUTER AND ITS WORKING

THIS CHAPTER INCLUDES

- *Uses of Computer*
- *Block Diagram of Computer*
- *Working of Computer*
- *Data and Information*
- *CPU*
- *Input Devices*
- *Output Devices*
- *Advantages and Disadvantages of Computer*

A computer has become an essential part of our lives. Today, you find computer in every field. It can be found in Hotels, Restaurants, Hospitals, Clinics, Schools, Colleges, Universities, Airports, Railway Stations, Bus Stands, Banks, Shops, Shopping Malls, Offices, and so on. Where ever you go, you will see a computer there. It has combined the whole world together by using Internet. Internet is the most commonly used term these days. It is a global system of interconnected computer networks. It is used to connect two or more computers so that people can share their data with each other. "Through internet computers all over the world are connected together using all possible mode of telecommunication. Internet helps us to search information and not only that it has completely changed the mode in which we communicate now."

USES OF COMPUTER

School
To study, search information and creating projects.

Hotel
To keep record of customer and employees.

Bank
To keep record to account and transaction details.

Airport
To book tickets and give information about the plane.

Shopping Malls
For billing and keep details of products.

Hosptial
To keep patients' details, their disease and treatment.

Defence
To share confidential details.

BLOCK DIAGRAM OF COMPUTER

The block diagram of computer system is given below:

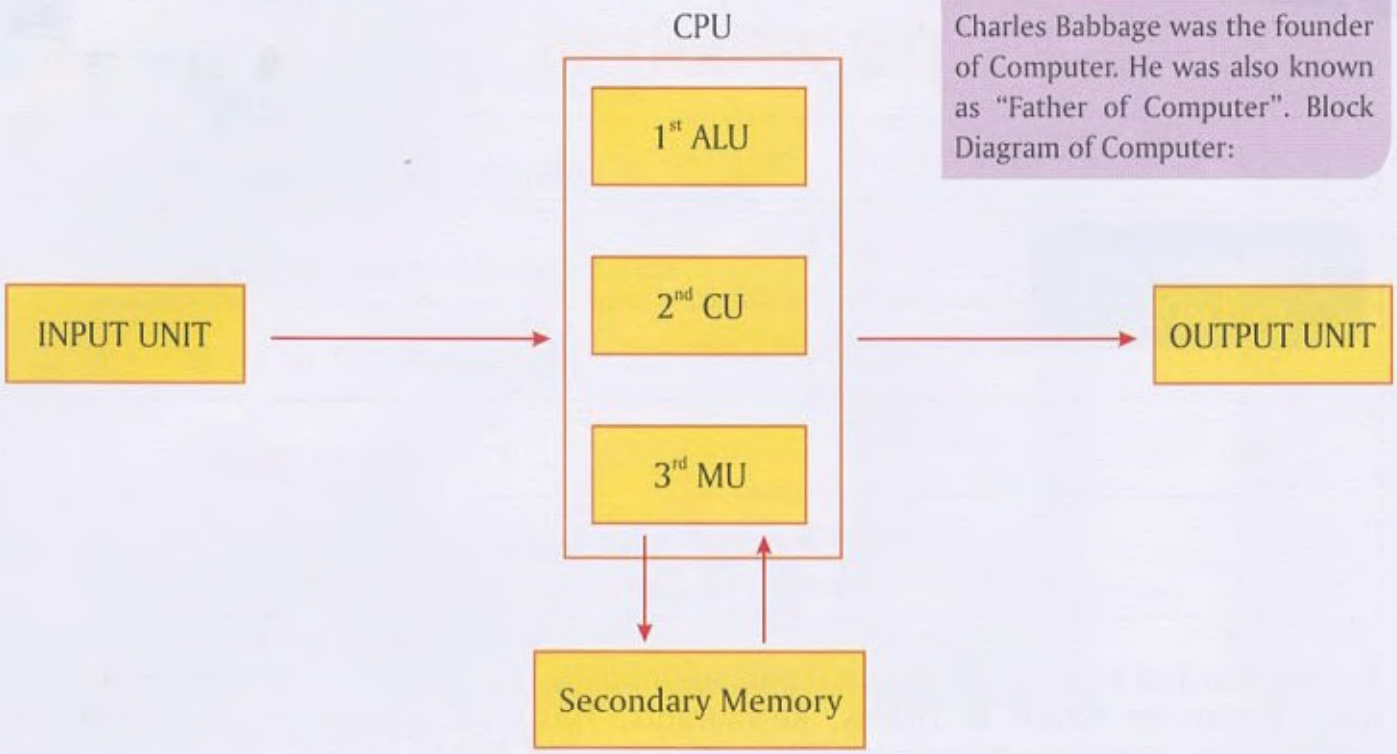

Fact File

Charles Babbage was the founder of Computer. He was also known as "Father of Computer". Block Diagram of Computer:

As you can see in the diagram, a computer consists of mainly three units:

a. **Input Unit:** Keyboard, Mouse, etc.

b. **Processing Unit:** Central Processing Unit (CPU)

c. **Output Unit:** Monitor, Printer, etc.

d. **Secondary Memory :** Hard disk, Pen drive, CD, etc.

WORKING OF COMPUTER

Each part of the computer has its own task and functions. All the parts combined together makes the computer system works efficiently.

INPUT UNIT:

a) Input devices are used to feed data and instruction into the computer.

b) It provides the input to the CPU for processing.

c) You can enter words, numeric data, paragraphs, sounds etc to the computer.

d) Input devices used to enter the data are Keyboard, Mouse, Light Pen, Joystick etc.

Fact File

A Computer System is not a single machine. The various parts of computer collectively make a computer system.

PROCESSING UNIT:

a) CPU (Central Processing Unit) is an important part of the computer.

b) It is also called brain of computer.

c) It accepts the input from the input unit and process it.

d) It produces the output (also called Information) and provides to the output unit.

OUTPUT UNIT:

a) The output unit accepts the output from the CPU.

b) It displays the output to the monitor screen.

c) Various output devices are: Monitor, Printer, Plotter etc.

d) The output produced on screen is known as soft copy.

DATA AND INFORMATION

Data are the raw facts and figures which needs to be processed. It has no meaning to the user until it is processed. When you process the data, it becomes the information. Information is meaningful and useful for any organization because it is helpful in decision making. User enters the input to the computer for processing. That input is called Data. When computer processes the input, it produces the output. That output is called Information.

Data	Processing	Information
Input		Output

Example:

Suppose we need to calculate the following expression.

3, 5, *, 2, 3, +,/	(3 * 5) / (2 + 3) = 15/5	3
Input	Processing	Output

CPU

CPU or Central Processing Unit is that part of computer where all the processing is done. It consists of further three parts:

a. **ALU:** ALU is Arithmetic and Logic Unit. It is used to perform

- Arithmetic Operations:
  - Addition (+)

- Subtraction (-)
- Multiplication (*)
- Division (/)

❖ Logical Operations:

- Less than (<)
- Less than equal to (<=)
- Greater than (>)
- Greater than equal to (>=)
- Equal to (=)
- Not equal to (!=)

b. **CU:** CU or Control Unit is that unit of the CPU whose main task is to control the over all functioning of the computer system. How and when to process data? Where the intermediate result will be stored? When to provide the output? All such tasks are done by the Control Unit.

c. MU – (Diagram) – (Top Block) – MEMORY
In two lower block one will be "PRIMARY MEMORY" and 2nd will be "SECONDARY MEMORY" MU: MU or Memory Unit is used to store the data. Memory is of two types:

Primary Memory:

Primary memory is the main memory which is directly connected to the CPU. The data which is currently processed by the CPU stores in Primary Memory. It is volatile in nature that is its contents are lost as soon as the power is switched off. It is very fast that is the instruction can be read and written on it at a very fast rate. It is very expensive. Here RAM is a volatile type of memory that is its contents are lost when power is switched off.

Example: RAM (Random Access Memory), ROM (Read Only Memory)

Secondary Memory:

Secondary Memory is the external memory which is connected to the CPU for providing extra storage to store the data. It is non-volatile memory that is its contents are not lost even after the power is switched off. It contents are removed when we delete them. It is not very fast. That is reading and writing data on it takes time. It is not very expensive.

Example: CD, Hard Disk, Pen Drive, DVD, etc.

Fact File

Primary Memory cannot store large amount of data because of the storage limitations, so secondary memory is used which can store large amount of data.

INPUT DEVICES

Input devices are used to enter data and instruction into the computer. Most commonly used devices are Keyboard and Mouse (it is a pointing device)

Keyboard :

Keyboard consists of various keys which are used to enter the data into the computer by pressing keys on it. A standard keyboard has 104 keys on it. Each key has its own function.

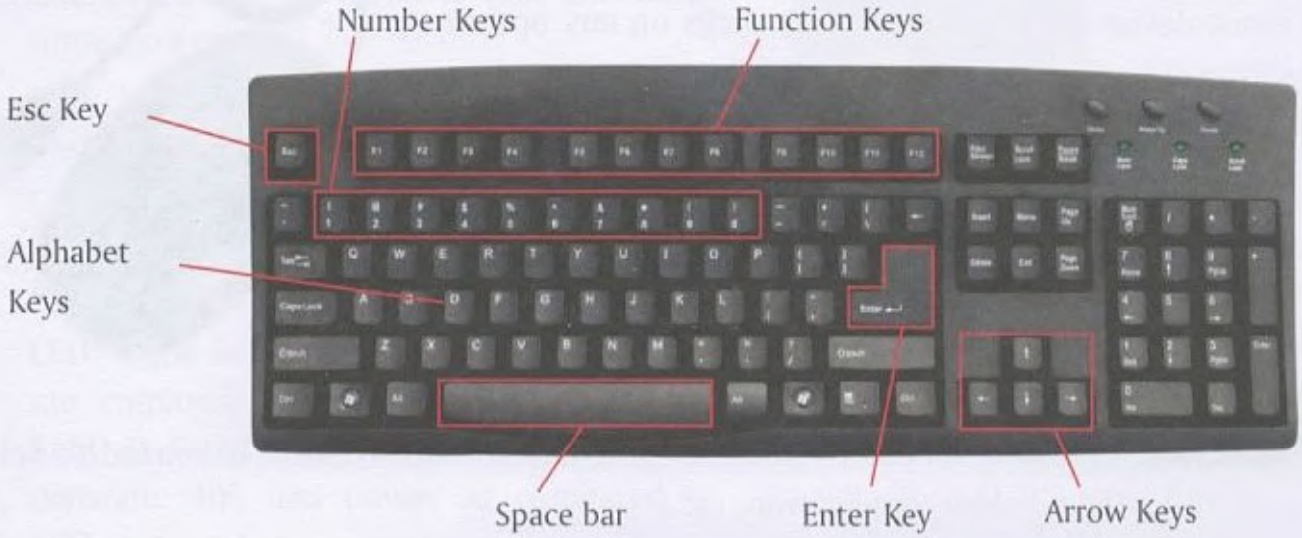

Various keys on the keyboard include:

- **Alphabetic Keys:** It includes 26 keys from A to Z. It is used to type words, lines and paragraphs. It is arranged in the form of QWERTY manner.
- **Numeric Keys:** It includes 10 keys from 0 to 9 arranged in a single row. It appears as a single line just below the Function key. A Numeric pad is also available on the right side of the keyboard- (It is used when large volumes of numeric data are to be entered.)
- **Function Keys:** It includes 12 function keys from F1 to F12 arranged on the top row. Each key is assigned a specific task depending on the application used.
- **Arrow Keys:** There are four arrow keys on the keyboard which are also known as Cursor Control Keys. These keys are used to move the cursor either to left or right or up or down.

Fact File

PgUp and PgDn keys are used to move one page up or down.

Fact File

Home key will move the cursor at the beginning of the line and End key moves the cursor to the end of the line.

- **Navigation Keys:** Navigation keys are used to move through the documents or web pages or to edit the text. It includes Home, End, Backspace, Delete, PgUp, PgDn, etc.
- **Special Keys:** There are some special keys which are used in conjunction with other keys. It includes Shift, Alt, Ctrl.

Mouse:

A mouse is also a pointing device which is used to control the pointer on the screen. It is also considered as input device because when user clicks on any option or button by using the mouse, it is taken as an input to the computer and computer performs action according to the option clicked.

A mouse consists of two buttons: Left Mouse button and Right Mouse button. It also has a scroller between the two buttons. A mouse can be used to perform following functions.

1. **Clicking :** Clicking means to press the left mouse button once. It is used to select an item (File, Folder, Application, etc.)
2. **Double Clicking :** Double clicking means to press the left mouse button twice in a quick succession. It is used to open a file, folder or an application.
3. **Right Click:** Right Click means to press the right mouse button once. It displays a list of options.
4. **Drag and Drop:** It is used to move an object from one place to another. Press left mouse button once to select the item (File, Folder or Application).

OUTPUT DEVICES

Output devices are used to produce the output either in the form of Softcopy (Shown on the monitor) or Hardcopy (Printed on paper). We should avoid taking hardcopy unless it is very necessary as it uses paper. We should avoid wastage of paper and save trees.

Monitor:

Monitor is an output device which produces the soft copy of output. When you type something from the keyboard, it also displays what you have typed. It is rectangular box which looks like a Television screen.

Types of Monitor:

There are various types of monitor available these days, like:

- **CRT:** CRT or Cathode Ray Tube is the monitor which is hardly found these days. It is replaced by the newer versions like LED or LCD. It is because it is bulky in size and not easily portable. It also consumes more power.
- **LCD:** LCD or Liquid Crystal Display is flat and light in weight monitor which consumes less power. It has replaced CRT monitors. It has a high resolution so the images are clearer and sharper.
- **LED:** Light Emitting Diode: These monitors are commonly used these days. They are light in weight and thinner in size. They consume 40% less power as compared to LCD.

CRT monitor

LCD monitor

LED monitor

Printer:

Printer is another commonly used output device which produces hard copy of output. It is a small rectangular box which prints on a paper with Black and White or Colored Ink. There are various types of printers used like Inkjet Printer, Daisy Wheel Printer, Drum Printer, Laser Printer etc.

Activity Time:

(Use of Keyboard, Mouse, Monitor and Printer)

1. Open Notepad and type few lines on "Parents" with the help of Keyboard.
2. Save the file by clicking on File> Save As. (Using Mouse)
3. You can see the typed data on the monitor screen.
4. After creating the file, take its print out using Printer.

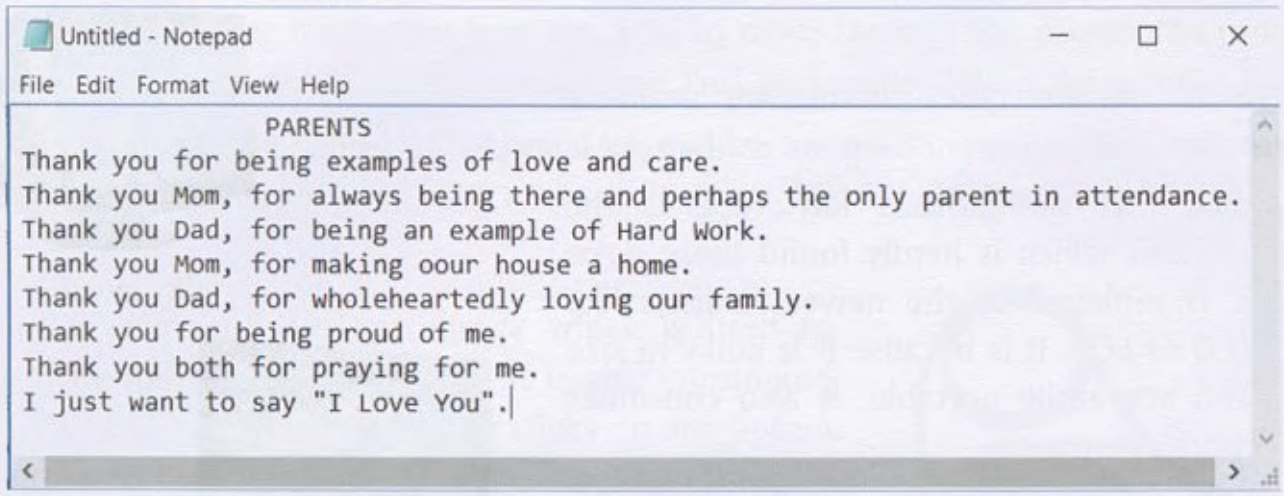

ADVANTAGES OF COMPUTER

1. **Accuracy:** A computer is a machine which always produce an accurate result. If you find any mistake that may be from user's side.
2. **Speed:** Computer is a very fast machine. It has a high processing speed. It processes data in milliseconds and nanoseconds.
3. **Storage:** A computer can store large amount of data which can be accessed by the user at any time.
4. **Versatility:** A computer is a versatile machine. It can perform number of tasks at same time. It is capable of being used in almost every field depending on the type and configuration of computer.
5. **Reliability:** A computer is a reliable machine. It does not make any mistake provided the instructions given for processing the data are not faulty.
6. **Diligence:** A computer never gets tired. It can work for long hours without getting bored and tired.

DISADVANTAGES OF COMPUTER

1. **Power Failure:** You cannot use computer in case of power failure. But these days, you can use laptops or iPads which can be charged. You can work for hours without need of electricity.
2. **No IQ (Intelligent Quotient) :** A computer has no IQ of its own. It works on the instruction given to it by the user. If you give the wrong instruction or input it will produce the result accordingly. It follows the principal of GIGO (Garbage In and Garbage Out).
3. **Not Affordable:** A computer system is a costly device. Everyone is not able to afford it.
4. **Effect on Health:** Sitting in front of the computer and working for long hours may cause bad effect on your health.

Chapter at a Glance

- You find computer in every field like hospitals, schools, banks, airports, railway stations etc.
- Internet is used to connect the computer all over the world, so that people can search information and communicate with each other easily.
- The input unit accepts the data entered by the user and provides it to the CPU for processing.
- CPU also called Brain of computer is used to process the data.
- Output unit accepts the output from the CPU and displays it on output device.
- Keyboard consists of various keys which are used to enter the data into the computer by pressing keys on it.
- A mouse is also a pointing device which is used to control the pointer on the screen.
- Monitor is an output device which produces the soft copy of output.
- Printer is an output device which produces hard copy of output.

Check Your Understanding

SECTION–A

A. Multiple Choice Questions:

1. ..... consists of various keys.

   a. Keyboard ☐ b. Mouse ☐ c. Light Pen ☐

2. ..... is also called Pointing Device.

   a. Monitor ☐ b. Printer ☐ c. Mouse ☐

3. Which of the following is used to process the data?

   a. Mouse ☐ b. CPU ☐ c. Keyboard ☐

4. Clicking means to press the left mouse button .....

   a. Once ☐ b. Twice ☐ c. Thrice ☐

5. ..... produces hard copy of output.

   a. Monitor ☐ b. Printer ☐ c. Speaker ☐

B. Fill in the blanks:

1. Computer is used to book tickets in ..... (Airport/ Hospital)
2. Computer is used to keep record of accounts and transactions in ..... (Schools/ Banks)
3. ..... unit is used to perform arithmetic and logic operations. (ALU/ CU)

4. ..... is used to store the data. (Output unit/ Memory)

5. ..... works according to the instructions given to it. (Computer/ Human)

C. Write T for True and F for False:

1. Internet is used to connect two or more computers. ☐
2. You cannot find computers in shopping malls. ☐
3. Data is meaningful and useful in decision making. ☐
4. Information is the processed data. ☐
5. Computer works on electricity. ☐

D. What is the purpose of following devices? Match to the correct answer.

It is used to process the data and also called brain of computer.		It is an electronic device which consists of hardware and software.
It accepts input from the user and provides of CPU for processing.		It is also called pointing device. It controls pointer on screen.
It produces hard copy of output and is separately attached to the computer.		It looks like a television screen and produces soft copy of output.

SECTION - B

A. Short-answer Questions :

1. What is computer?

   .....

2. What is Internet?

   .....

3. What do you mean by Data?

   .....

4. What is Information?

.....

5. What is the use of Printer?

.....

6. Give any two advantages of computer.

.....

7. Give any two disadvantages of computer.

.....

B. Long-answer Questions :

1. Write down the various areas where you find computer system.

.....

.....

2. What is the purpose of:

   a. Input Unit:

   .....

   b. Output Unit:

   .....

   c. Processing Unit:

   .....

3. What is the purpose of Central Processing Unit?

.....

.....

4. Write a note on Memory.

.....

.....

5. Write a note on following devices:

   a. Keyboard

   .....

b. Mouse

.....

c. Monitor

.....

Activity Time

Lab Activity :

For Teachers:

- Take the students to computer lab.
- Show various parts of computers to them.
- Demonstrate the working of computer.
- Show the difference between hardcopy and softcopy.

For Students:

- Open MS Word 2016.
- Type few lines on "Advantages and Disadvantages of Computer".
- Save the document with name "Computer".
- Close the file.

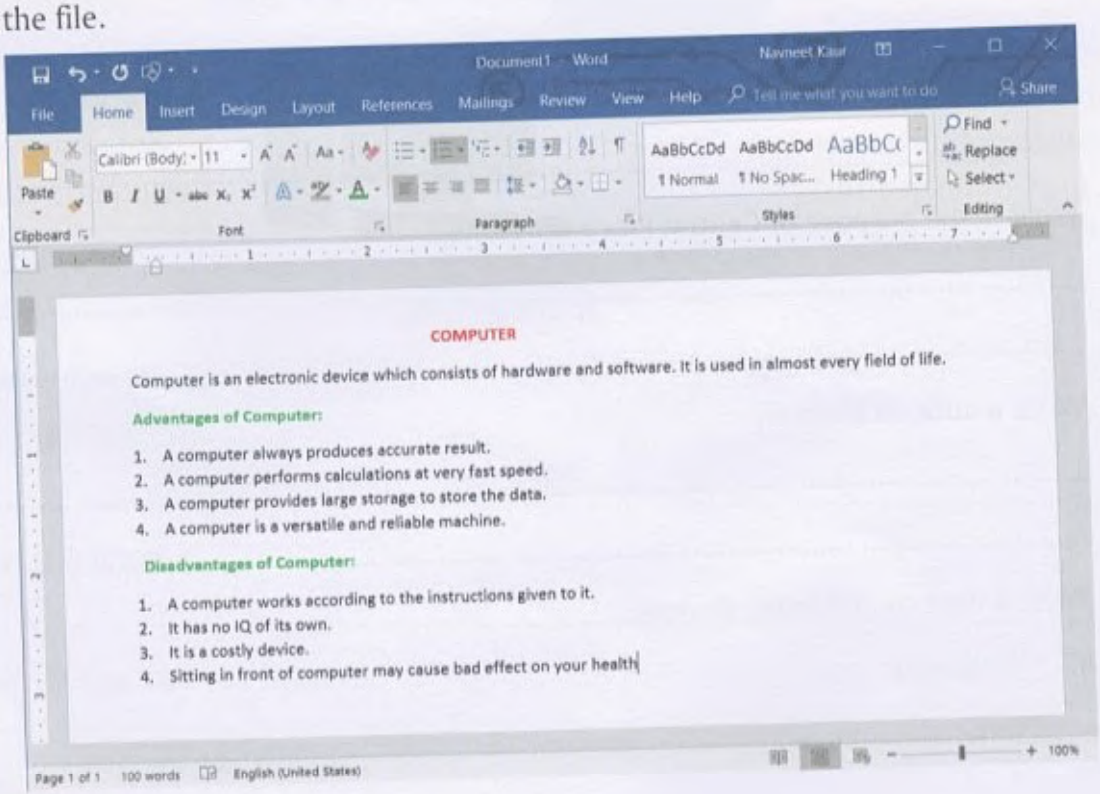

Instructions:

1. Use alphabetic keys to type text.
2. Use numeric keys to type numbers.
3. Use Caps Lock key to type the heading in capital letters.
4. Use mouse to select the word and change its font color.
5. Use Enter key to move to the next line.

Online Activity:

- Use online methods and find out one input and one output device other than discussed in this chapter.
- Take its print and paste it below.
- Also write two-two lines about each in the space given below.

.....

.....

.....

.....

BRAIN DEVELOPER

A. Draw the block diagram of a computer and label it.

B. Circle the images that are related to computer system and cross the one that are not.

C. Rearrange the following figures according to the Input (I), Processing (P) and Output (O).

Rice and Water	Cooked rice	Making Rice in a cooker

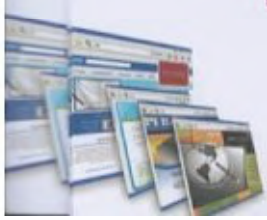

Making Juice

Orange Juice

Oranges

Dirty clothes

Washed clothes

Washing clothes in Machine

Project Work:

- Go out with your parents.
- Observe the areas where you find the use of computers.
- Click the photographs and take its printouts.
- Paste the photographs you have clicked in the below blocks.